OPERATION AND PARTS MANUAL
HAND HELD POKER VIBRATOR
P14-E

LIEVERS HOLLAND
Groot Mijdrechtstraat 68 – 3641 RW
Postbus 103 - 3640 AC
Mijdrecht (NL)
Phone.: 0031 – (0)297-231900 / Fax: 0031 – (0)297-231909
E-mail: info@lieversholland.nl / Internet: www.lieversholland.com

CONTENT

1. PREFACE **3**

2. INTRODUCTION **4**

3. TECHNICAL SPECIFICATIONS **5**

4. SAFETY **7**

4.1. SAFETY ASPECTS 7
4.2. SAFETY PRECAUTIONS 7
4.3. REMAINING RISK 8

5. USE **9**

5.1. CONNECTING AND DISCONNECTING THE POKER VIBRATOR 9
5.2. OPERATION & APPLICATION 10
5.3. USE 10
5.4. APPLICATION EXAMPLE 10

6. MAINTENANCE **12**

7. TROUBLESHOOTING, REPAIRS **14**

8. DISMANTLING, DISPOSAL **15**

9. PART LISTS **16**

10. DECLARATION OF CONFORMITY **20**

© Lievers Holland, NL 1994.

All rights are reserved. Reprints, copies, adaptations for new editions and publications in any form or through any media, including abstract forms are not permitted unless written permissions is first obtained from Lievers Holland.

Lievers Holland may not be held responsible for any guarantees or liabilities for the contents of this publication and points to, in this case, all implied securities for suitability of merchantability or any other purposes. Lievers Holland further retains the right to revise this publication and to alter the contents over certain periods of time, without the obligation to report such alterations and changes first.

1. Preface

This manual has been written to help you operate and maintain the poker vibrator P14E safely. This manual is intended for dealers and operators of the poker vibrator P14E and contains useful instructions for use, maintenance and repair. These instructions need to be respected and followed.

Guarantee provisions

All damage to parts of the poker vibrator, occurring within 12 months after date of purchase as a consequence of material, production or construction defects, will be replaced by the manufacturer as soon as possible.

The guarantee is valid for 12 months from the date of purchase except for wear parts like carbon brushes, cables, plug, rubber sleeve, rocker switch and rubber protection cap.

The manufacturer declines all responsibility for unsafe situations, accidents and damage caused by:

- Ignoring safety and using instructions as described on the machine or the instruction manual.
- Incompetent or incorrect maintenance (f.i. irregular cleaning of the ventilation slots and cleaning with a high pressure cleaner or by a water jet under high pressure).
- Connecting the poker vibrator to the wrong voltage.
- Storing the machine in a damp place.
- Assembling or dismantling of the poker vibrator by unqualified personnel (employees who are unfamiliar with the content of this instruction manual).
- Other use than the prescribed use.
- Alternations of the machine carried out by other than manufacturer. This also includes assembling of non-original parts.

Guarantee certificate

P14 nr: _____

Date of purchase: _____

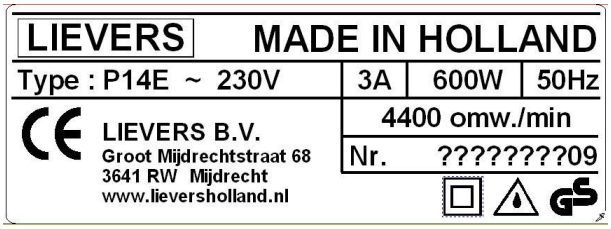

Fig. 1: example label P14-E

The label can be found under the handle on the motor housing.

2. Introduction

Intended use
A hand held poker vibrator is a machine with a vibrating, steel bottle, for compacting concrete. The poker vibrator P14E consists of an electrical motor in an impact and shock proof plastic motor housing and a flexible poker vibrator. The flexible poker vibrator is attached to the part of the spindle which sticks out of the motor housing. On the motor housing is a switch for turning the electrical motor on and off.

Operation
The electrical drive-unit is started by pressing the switch to the 'ON' position. The toothed motor shaft drives the gear wheel on the spindle. The spindle ensures that the flexible drive shaft rotates. The drive shaft's rotating movement, ensures that the pendulum moves along the inner circumference of the poker head. This causes the vibrations. The vibrations from the poker head compact the concrete.

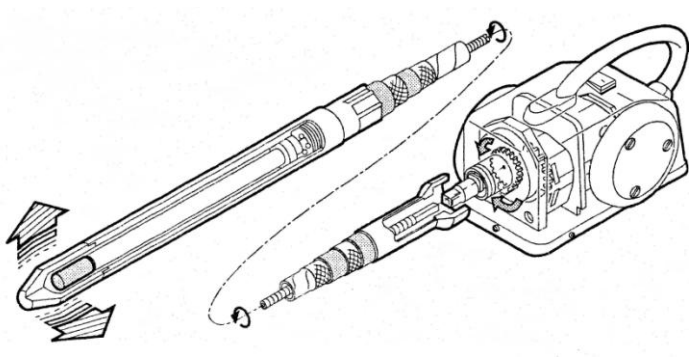

Figure 2: the driving unit

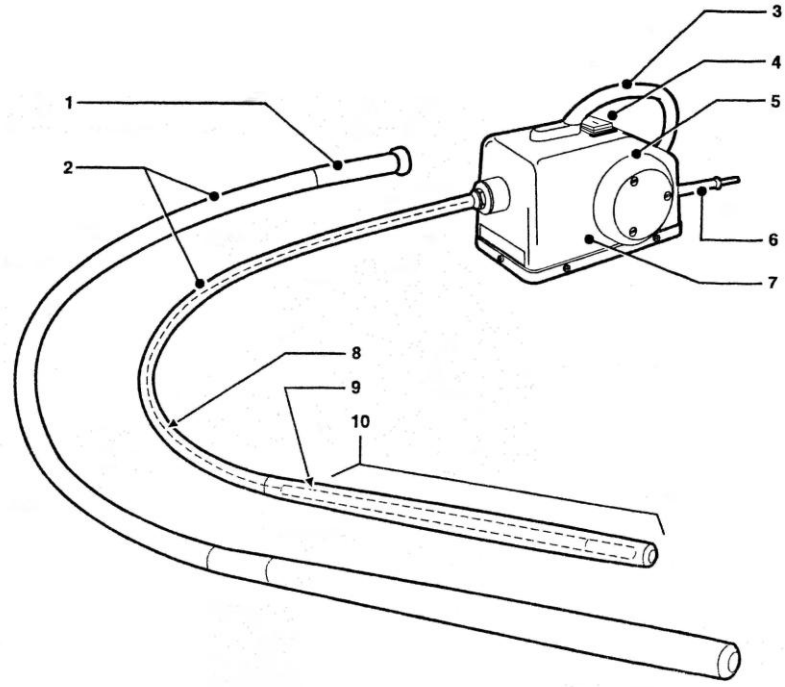

Figure. 3: Overview important components

1. hose coupling
2. vibrating hose
3. handle
4. switch
5. ventilation slot
6. electric cable
7. motor housing + electrical motor
8. flexible spindle
9. pendulum
10. vibrator housing

3. Technical specifications

Technical details
For technical details of the handheld poker vibrator P14E, we also refer to the label on page 3 of this manual.

Measurements motor housing

Length	280 millimetres
Width	180 millimetres
Height	180 millimetres

Electrical motor

Capacity	600 Watt
Revolutions	4400 r/min motor
	12000 r/min vibrating element
Voltage	230 V/1-fase/50 Hz
Current consumption	3 Ampère

Mass (without poker)	3 kg

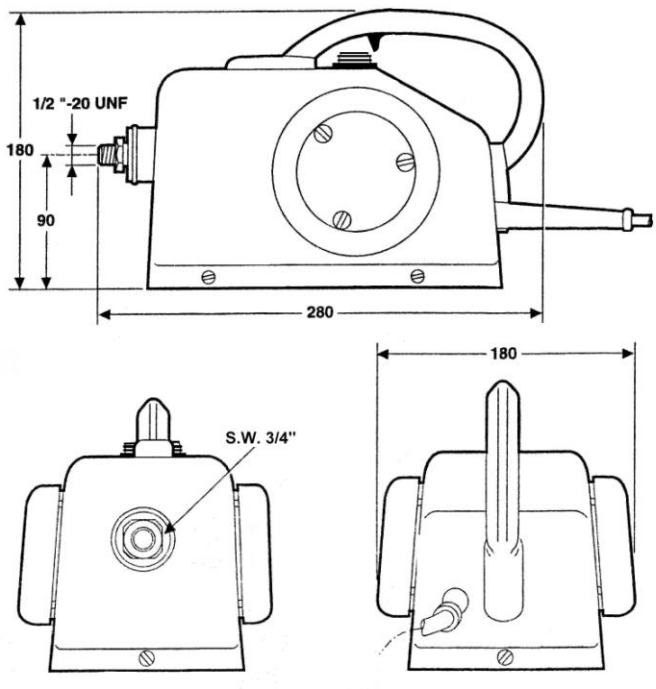

Figure 4: Measurements in mm of the P14E drive unit

Isolation class	IP54, splash proof insulation
	Double insulated, S.E.V.-TÜV-/GS-tested.
Design	Portable.

Motor protection	Impact and shockproof plastic motor housing.
Poker vibrator connection	Quick release.
Sound pressure level db(A)	79 (outside, 1 metre distance, ear height).
Weighted effective value of acceleration	Determined according to ISO 5349 part 1: higher than 2,5m/s² (12,1m/s²) *. These data were measured during operation of the inside vibrating element in concrete.
Testing vibrating bottle	Tested on leakage following the internal production procedure.
Testing electrical motor	According to NEN 3140, each electrical motor undergoes electrical safety tests. A specially developed measuring instrument tests isolation resistance, leakage current and power consumed.
* Obligated	According to ISO 5349, whenever wearing vibrating reducing gloves, a user can continuously work for 3 hours (comfort value) to a max. of 11.7 hours per day safely.

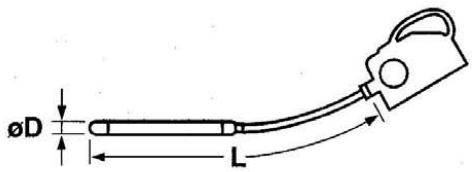

Diameter pokerhead øD (mm)	Mass vibr. poker (kg)	Vibration frequency (p.min)	Centrif. force (N)	Amplitude (mm)	Length flex. poker-vibrator L (m)
28	2,0	12000	2500	0.8	1 - 1.5 - 2 -2.5 - 3 - 3.5 - 4
38	3,4	12000	3900	1.0	1 - 1.5 - 2 -2.5 - 3 - 3.5 - 4
45	3,6	12000	4500	1.5	1 - 1.5 - 2 -2.5 - 3 - 3.5 - 4

Table 1: View of the assortment of flexible poker vibrators

The flexible poker vibrator with a pokerhead of 38 and 45 millimetres are available with rubber caps.

4. Safety

Explanation of the used safety symbols

1. Read the operating manual before using the machine.
2. Safety glasses, safety helmet and ear protection compulsory.
3. Gloves compulsory
4. Safety shoes with extra protection compulsory.
5. Before opening the motor housing remove the plug.
6. Dangerous electrical voltage.
7. Look out and be careful.

Figure 5: safety symbols

ENSURE THAT ALL SYMBOLS – ON THE POKER VIBRATOR – CAN ALWAYS BE CLEARLY READ .

4.1 Safety aspects

The following safety aspects apply to the machine:

- Safety symbols are present on the handheld poker vibrator P14 E.
- The drive unit has a thermical relais protecting against overload.

4.2 Safety precautions

- Always read the necessary instructions in the manual. If the safety aspects are not clear to you, then ask the manufacturer for an explanation.
- Ensure that you are qualified (familiar with the content of this manual) for operating and carrying out light maintenance work to the poker vibrator.
- Regular maintenance improves safe operation of the poker vibrator P14E.
- Prolonged operation of P14 may damage your health. Never operate the poker vibrator P14E for longer than an hour at a time. When operating frequently, it is obligated to wear vibration reducing gloves.
- When operating the poker vibrator wear ear protection, safety glasses, a safety helmet, protective (anti-vibration) gloves and protective clothing.
- Be careful when lifting and carrying the poker vibrator. Do not bend forwards when picking up the apparatus, but bend your knees. Ensure that the working area is within your reach, so that you do not have to bend forward.

- Disconnect the electrical supply to the poker vibrator, before you start to clean or maintain the poker vibrator
- Check whether the electrical source complies with the local valid regulations: use an electrical source which is provided with an earth leakage switch or attach a safety transformer between the electrical mains and the poker vibrator.
- Use earthed extension leads, when it is necessary to use extension leads. Ensure that the wall socket and possible connections between the extension leads are protected against dampness
- Do not pull the plug out of the wall socket or extension lead by its lead.
- Check the handle and strap attachments, before you move the poker vibrator.
- Check the feeder cable's outer casing and if in use extension lead's outer casing, before you connect the poker vibrator P14E to the electrical mains. The outer casing may not be damaged.
- Check the feeder cable's attachments on the poker vibrator P14E, before you connect the poker vibrator to the electrical mains. The cable must be correctly attached to the poker vibrator P14E.
- Check if the ventilation openings in the motor housing are not blocked.
- Ensure that the feeder cable does not graze past any objects.
- Immediately cut off the electrical power to the electrical motor, if the motor housing falls into the concrete.
- Switch off the poker vibrator P14E when the electrical power cuts off. This prevents the poker vibrator from starting suddenly when the electrical power comes on again.
- Check the feeder cable and extension lead's attachments regularly. When the poker vibrator is in operation, the plugs can loosen due to the vibrations.
- Place a switched off poker vibrator on a solid and stable surface.
- Always place the motor housing in a dry area.
- When the poker vibrator is not being used for longer a period of time, then it must be stored in a dry and clean area.
- When cleaning the poker vibrator, ensure that no water or cleaning detergent gets into the motor housing.
- On working areas, take notice and follow general and local safety regulations. Before starting your work, make sure that you are informed about all safety regulations and instructions.

4.3 Rest risk

The manufacturer aimed for the best balance in functionality, safety and operation possibilities of the P14 E.

Please take notice of the following rest risk of the handheld poker vibrator P14 E:

- Prolonged operation of P14 may damage your health. Never operate the poker vibrator P14E for longer than an hour at a time. When operating frequently, it is obligated to wear vibration reducing gloves.

The manufacturer describes this as a rest risk. Nevertheless, well instructed operators with a correct working attitude concerning safe operating are well capable of working safely with the P14E.

5. Use

Read the safety aspects and operating instructions before use. If aspects are not clear to you, then contact the manufacturer.

For the location and description of the poker vibrator's parts, which are mentioned in the text, we refer to figure 3 in this manual.

5.1 Connection and disconnection of the poker vibrator

In the text below are numbers between brackets. These numbers are positions numbers and they correspond to the numbers in the parts list for figure 6 "connecting the flexible poker vibrator".

DISCONNECT THE ELECTRICAL SUPPLY TO THE POKER VIBRATOR BEFORE YOU ASSEMBLE OR DISMANTLE THE FLEXIBLE POKER VIBRATOR.

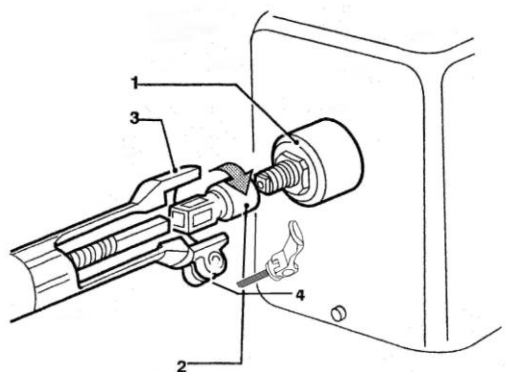

1. Motor coupling
2. Drive pin
3. Hose coupling
4. Quick release

Figure 6: connecting the flexible poker vibrator

Connection

Connect the flexible poker vibrator to the motor coupling as follows:

1) Screw the drive pin (**2**) clockwise, onto the screw-thread of the drive spindle tightly.
2) Push the hose coupling (**3**) over the motor coupling (**1**). The square ended flexible drive shaft now slides into the drive pin.
3) Adjust the quick release and tighten it by pressing the handle down (**4**) .
4) The poker vibrator P14E is now ready for use.

Disconnection

To disconnect the flexible poker vibrator, proceed as follows:

1) Pull the handle of the quick release upwards (**4**).
2) Pull the hose coupling (**3**) from the motor coupling (**1**) and pull the flexible drive shaft out of the drive pin (**2**).

5.2 Operation and application of the poker vibrator

1) Check that the flexible poker vibrator is correctly connected to the motor drive's spindle
2) Place the motor housing in the direct vicinity of where you are going to compact the concrete.
3) Check if the switch is in the "0" (off) position.
4) Connect the flexible poker vibrator to an alternating voltage mains of 230 V, 50Hz, which is provided with an earth leakage switch. Or connect it to 115 V, 50/60 Hz, when using a 115 V electrical drive unit. Connect the machine to the transformer.
5) Place the flexible poker vibrator into the concrete and push the rocker switch to the "I" (on) position.

5.3 Use

1) Allow the poker vibrator to vibrate for 3 to 4 seconds in one place in the concrete..
2) Pull the flexible poker-vibratos out of the concrete and move it to the following place
3) Repeat procedures 5, 6 and 7, until you have compacted the concrete completely.
4) Press the switch in the "0" position
5) After use, place the poker vibrator on a dry and stable surface
6) Pull the plug out of the wall socket.

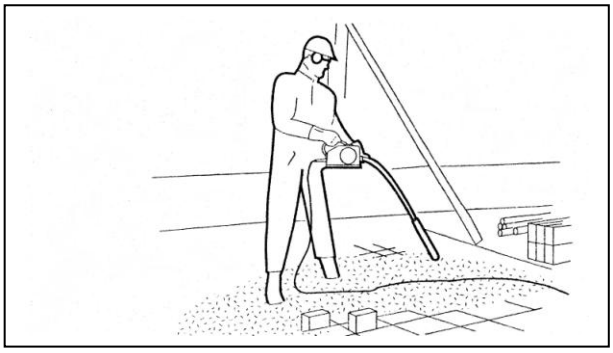

Figure 7: Operation procedure during the compacting of concrete.

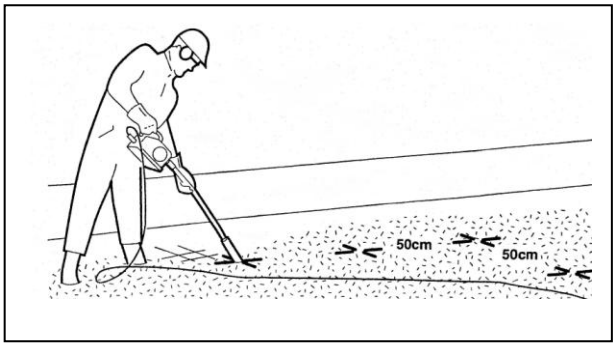

Figure 8: Vibration locations when compacting concrete floors

5.4 Application example

The distance between two vibrations places and the vibration period in one place, depends on the thickness of the concrete layer and the composition of the concrete.
The following points are for guidance.

<u>Floors:</u>

-Stick the flexible poker vibrator slowly into the concrete.
-Vibration time 3 to 4 seconds.
-Pull the flexible poker vibrator slowly out of the concrete and move it.
-The next vibration places at a distance of ± 50 cm. from one another.

Walls and columns:

-Sink the flexible poker vibrator into the formwork.
-Pour concrete to ± 100 cm.
-Vibration time 3 to 4 seconds.
-Pull the flexible poker vibrators out of the concrete slowly and move it.
-The next vibration places at a distance of ± 50 cm from one another.
-Now ready for the following pour of ± 100 cm of concrete.

6. Maintenance

Although the poker vibrator has a few moving parts, regular maintenance promotes a long and trouble-free life.

Warning:
Disconnect the electrical supply to the poker vibrator, before you can carry out any maintenance activities to the poker vibrator.

Cleaning the ventilation caps
The ventilation slots on both sides of the motor housing should be kept open at all times, in order to achieve a maximum cooling effect. Check them at the end of each working day. If the ventilation caps are not open, then clean the ventilation caps as follows:

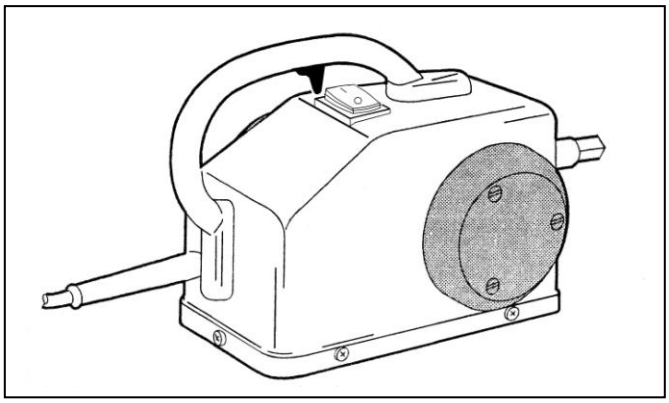

Figure 9: Cleaning the ventilation caps

1) Remove the three screws from one of the ventilation caps.
2) Remove the ventilation cap from the motor housing.
3) Clean the inside and outside of the ventilation cap with a brush and water.
4) Under the left side ventilation cap (air-intake side), an air filter is mounted. If the ventilation caps must be cleaned, also the air filter must be renewed.
5) **Careful:** Ensure that no water gets into the motor housing.
6) Clean the direct area of the ventilation opening in the motor housing, with a damp cloth.
7) Renew the air filter.
8) Place the ventilation cap over the ventilation opening in the motor housing. Ensure that the holes in the ventilation cap are in a direct line with the holes in the motor housing.
9) Attach the ventilation cap to the motor housing with three screws.
10) Carry out the same operation in this section for the other ventilation cap.

Cleaning the flexible poker vibrator

During compaction of the concrete, the flexible poker vibrator will become dirty. Periodical maintenance is vital to the safe and efficient operation of the flexible poker vibrators. It is, therefore, highly recommended to clean the flexible poker vibrator daily with water and a cleaning detergent that does not affect the poker vibrator material.

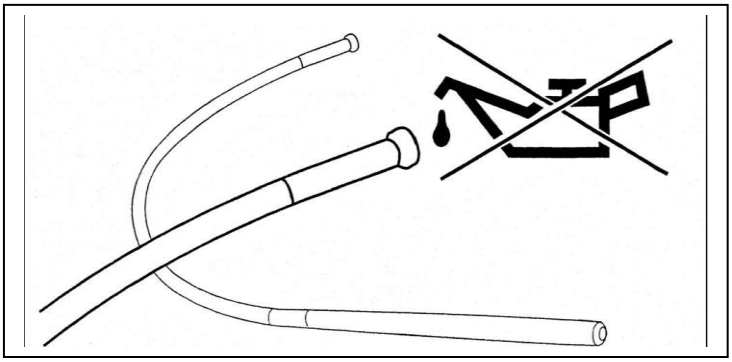

Figure 10: DO NOT LUBRICRATE .

DO NOT LUBRICATE THE PENDULUM AND THE POKER HEAD! THE FLEXIBLE DRIVE SHAFT OF THE POKER VIBRATOR HAS BEEN LUBRICATED DURABLY BY THE MANUFACTURER.

1. POKER HOUSING
2. CLEANING RAG
3. SPINDLE WITH GROOVE (LENGTH 40 CM. DIAM Ø 6 MM)
4. DRILL WITH ELECTRIC SPEED REGULATOR

TIP: Please contact Lievers B.V. if problems occur which are not mentioned in this list or if a mentioned problem is not solved by the solutions listed

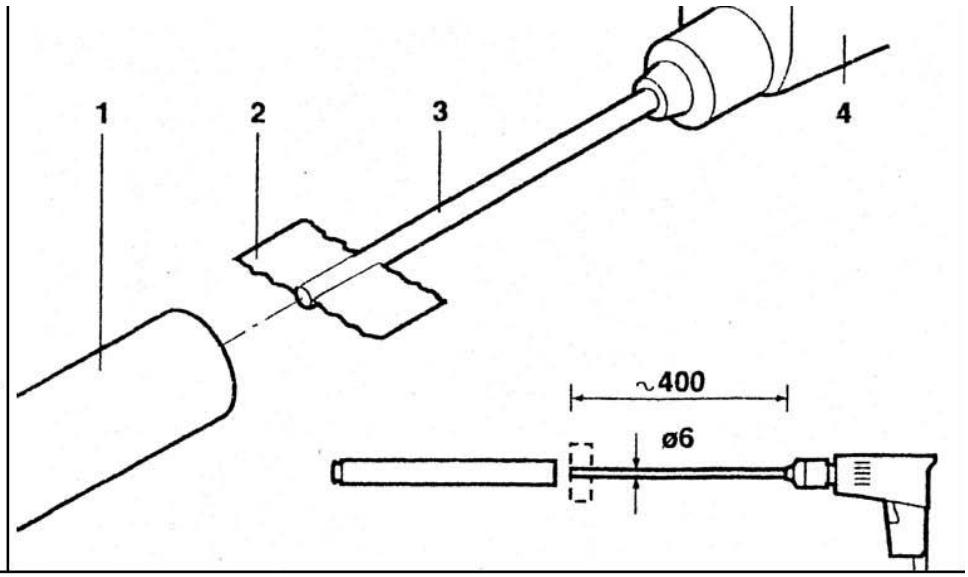

Figure 11: Cleaning of the poker housing .

7.Trouble shooting, repairs

The table below shows the most occurring problems, causes and solutions:

PROBLEM	CAUSE	**SOLUTION**
The connected and activated electrical drive-unit keeps tripping out.	The electrical motor has been overloaded, because the flexible poker vibrator is jammed between the reinforcement.	Prevent the flexible poker vibrator of getting jammed between the reinforcement. Stop operation if the poker vibrator gets jammed after all. Reset - if necessary - the thermical relay.
The connected and activated electrical drive-unit regularly trips out.	The electrical motor has been overloaded, due to a faulty electrical supply.	Electrical supply via a safety transformer: check the distributed power from the safety transformer. Electrical supply via electrical mains: check the plug connections for defects. Use an extension lead of a maximum length of 25 m with a cross section of 2.5 mm².
The poker vibrator does not vibrate in the “ON” position.	The pendulum, in the pokerhead, does not rotate properly	Tap against the tip of the pokerhead with a solid object.
The electrical drive-unit rotates irregularly.	Worn out carbon brushes.	Replace the worn out carbon brushes for new ones (replace every 6 - 12 months).
The pokerhead is not vibrating sufficiently.	The pokerhead and the pendulum are dirty, due to lubrication with oil or grease.	Dismantle the pokerhousing, the flexible drive shaft and the pendulum. Remove the grease from these parts from the inside of the pokerhousing thoroughly. After removing the grease, lubricate the flexible drive shaft with a special grease, which is available from the manufacturer.
The poker vibrator does not work.	A break in the feeder cable.	Check the electrical cable and plug. Replace the faulty part(s).
The electrical motor does not get into the required number of revolutions.	Extensive voltage drop, due to the feeder cable being too long (longer than 100m)	Move the electrical source closer to the working area.
The tip of the pokerhead gradually vibrates less.	Dirt on the inside of the pokerhouse due to extensive use.	Dismantle the pokerhousing and the pendulum. Use a rag to clean and remove the grease from both of the parts.

Table 2: the most occurring problems, causes and solutions:

Repairs

TIP: WHEN ORDERING PARTS, FILL IN THE ORDER FORM ACCURATELY. LIEVERS B.V. DECLINES ALL RESPONSIBILITY FOR THE SUPPLY OF INCORRECT SPARES DUE TO INCOMPLETE OR UNCLEAR REQUESTS.

When ordering parts please state the following information:

- Type of poker vibrator.
- Year of construction.
- Order number plus description of the part.
- The required quantity.
- The dispatch address and dispatch mode.

Contact details Lievers Holland:
PO Box 103
3640 AC Mijdrecht
Tel: +31 (0)297-231900
Fax: +31 (0)297-231909
E-mail: info@lieversholland.nl
Internet: www.lieversholland.com

8. Dismantling, disposal

National and local regulations concerning dismantling and disposal of materials need to be obeyed. According to our knowledge, handheld poker vibrator P14E does not contain material which is a danger to the environment.

9. Part lists

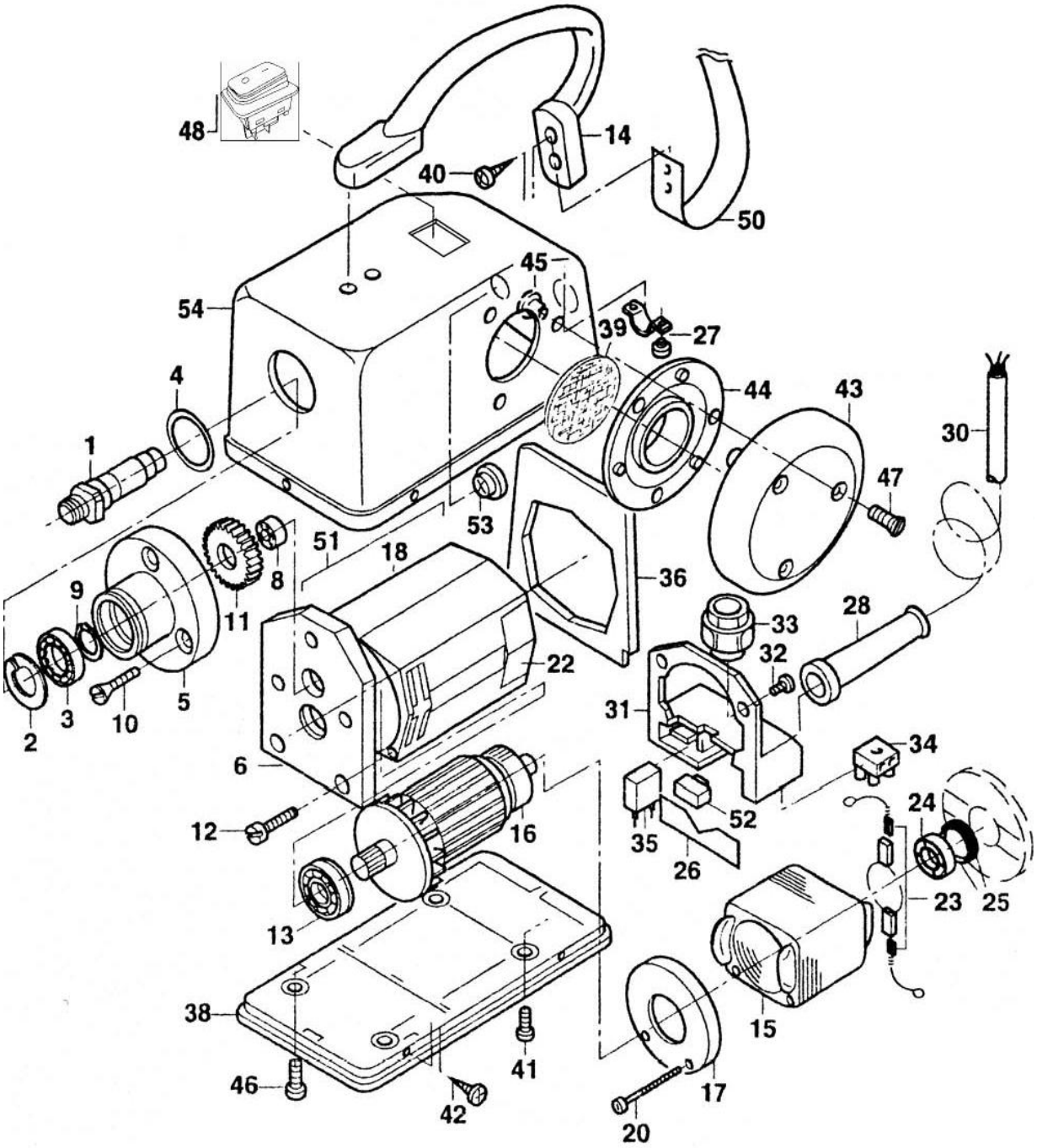

Figure 12: Exploded view P14E drive unit

Table 3: part list P14E drive unit

Index	Article number	Quantity	Description
1	1101220010	1	Spindle
2	1101220020	1	Circlip
3	1101220030	1	Bearing
4	1101220040	1	O-ring
5	1101220050	1	Front flange
	1101220051	1	Front flange complete
6	1101220060	1	Lower flange
8	1101220080	1	Needle bearing in lower flange
9	1101220090	1	Circlip
10	0293	3	Screw
11	1101220110	1	Gear wheel
12	0249	4	Screw
13	1101220130	1	Bearing
14	1101220140	1	Handle
15	1101220150 / 1101110150	1	Stator 230V / Stator 115V
16	1101220160 / 1101110160	1	Rotor + fan 230V / Rotor + fan 115V
17	1101220170	1	Fan protection
18	1101220180	1	Motor housing
20	1101220200	2	Screw
22	1101220220	2	Brush cover
23	1101220230	1	Carbon brushes (set)
24	1101220240	1	Bearing
25	1101220290	1	Rubber bearing ring in motor housing
26	1101220260	1	Plastic cap
27	1101220270	1	Cable clamp
28	1101220280	1	Rubber sleeve
30	1101220301	1	Electric cable (euro) 5 meter
31	1101220310	1	Housing support
32	0248	2	Screw
33	0401	1	Cable packing box PG11
34	1101220340	1	Luster clamping
35	1101220350	1	Capacitor
36	1101220360	1	Rubber partition
38	1101220380	1	Housing base plate
39	1101220390	1	Dust filter
40	0234	4	Screw
41	0248	2	Screw
42	0235	6	Screw
43	1101220430	2	Ventilation cap
44	1101220440	2	Interior ventilation
45	1101220450	6	Plastic screw cap
46	0264	2	Screw
47	0293M	6	Screw
48	1101220480N	1	Switch
50	1101220500	1	Strap
51	1101220510	1	Drive motor 230V complete
52	1101220520	1	Thermical relay (option)
53	1101220530	1	Plastic screw cap (option)
54	1101220540N	1	Plastic motor housing (excl. handle)
55	1101220510	1	Drive motor complete 115 V

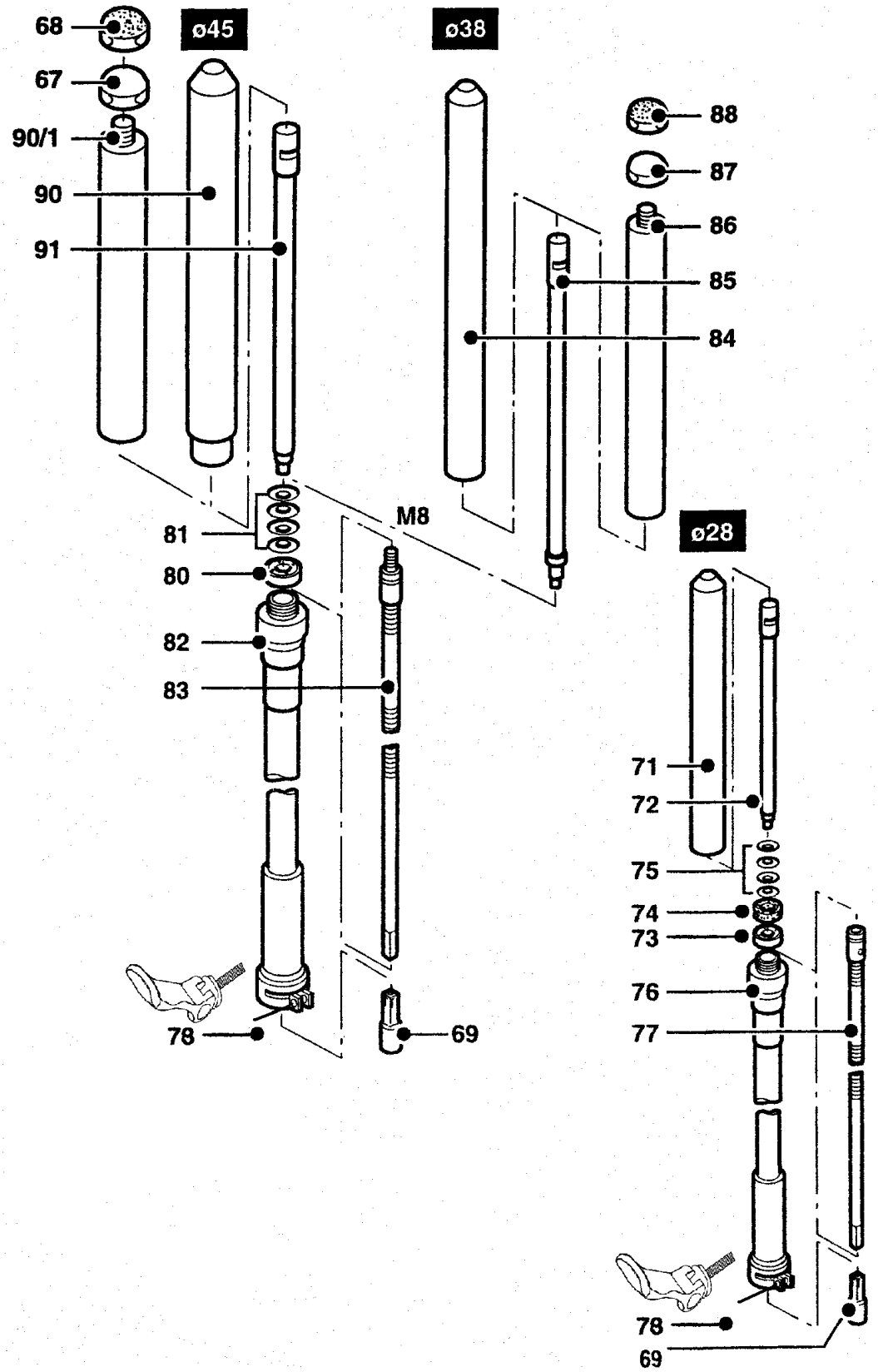

Figure 13: Exploded view poker vibrator / hose

Index	Article number	Quantity	Description
67	1100450010	1	Steel point 45 mm
68	1100450011	1	Rubber tip 45 mm
69	1100000008	1	Coupling pin
71	1100280001	1	Vibrator housing 28 mm
72	1100280002	1	Pendulum 28 mm
73	1100280003	1	Bearing 28 mm
74	1100280004	1	Joint ring 28 mm
75	0190	4	Spring sourcer 28 mm
76	1100281006	1	Hose + coupling 28 mm - 1.0 metres
77	1100281007	1	Flexible shaft 28 mm - 1.0 metres M8
	1100281506	1	Hose + coupling 28 mm - 1.5 metres
	1100281507	1	Flexible shaft 28 mm - 1.5 metres M8
	1100282006	1	Hose + coupling 28 mm - 2.0 metres
	1100282007	1	Flexible shaft 28 mm - 2.0 metres M8
	1100282506	1	Hose + coupling 28 mm - 2.5 metres
	1100282507	1	Flexible shaft 28 mm - 2.5 metres M8
	1100283006	1	Hose + coupling 28 mm - 3.0 metres
	1100283007	1	Flexible shaft 28 mm - 3.0 metres M8
	1100283506	1	Hose + coupling 28 mm - 3.5 metres
	1100283507	1	Flexible shaft 28 mm - 3.5 metres M8
	1100284006	1	Hose + coupling 28 mm - 4.0 metres
	1100284007	1	Flexible shaft 28 mm - 4.0 metres M8
78	1100000016	1	Quick release
80	1100340003	1	Bearing 38/45 mm
81	0191	4	Spring sourcer 38/45 mm
82	1100341006	1	Hose + coupling 38/45 mm - 1.0 metres
83	1100341007	1	Flexible shaft 38/45 mm - 1.0 metres M8
	1100341506	1	Hose + coupling 38/45 mm - 1.5 metres
	1100341507	1	Flexible shaft 38/45 mm - 1.5 metres M8
	1100342006	1	Hose + coupling 38/45 mm - 2.0 metres
	1100342007	1	Flexible shaft 38/45 mm - 2.0 metres M8
	1100342506	1	Hose + coupling 38/45 mm - 2.5 metres
	1100342507	1	Flexible shaft 38/45 mm - 2.5 metres M8
	1100343006	1	Hose + coupling 38/45 mm - 3.0 metres
	1100343007	1	Flexible shaft 38/45 mm - 3.0 metres M8
	1100343506	1	Hose + coupling 38/45 mm - 3.5 metres
	1100343507	1	Flexible shaft 38/45 mm - 3.5 metres M8
	1100344006	1	Hose + coupling 38/45 mm - 4.0 metres
	1100344007	1	Flexible shaft 38/45 mm - 4.0 metres M8
84	1100380001	1	Vibrator housing 38 mm
85	1100380002	1	Pendulum 38 mm
86	1100380009	1	Vibrator housing interchangeable 38 mm
87	1100380010	1	Steel point 38 mm
88	1100380011	1	Rubber tip 38 mm
90	1100450001	1	Vibrator housing 45 mm
90/1	1100450003	1	Vibrator housing interchangeable 45 mm
91	1100450002	1	Pendulum 45 mm

Table 4: Partlist P14E for the flexible poker vibrator

10. Declaration of conformity

EC DECLARATION OF CONFORMITY

EC-declaration of agreement for machinery
(Directive 2006/42/EC, Annexe II, under A)

Supplier: Bouwmachinefabriek Lievers B.V.
Address: Groot Mijdrechtstraat 68, 3641 RW Mijdrecht

Hereby declares that

The poker vibrator P14 E:

1) Complies with the regulations for the Machine Directive 2006/42/EC , Directive 2006/95/EC and the EMC-Directive 2004/108/EC.

2) complies with the following harmonised standards: NEN-EN-60204-1 (2006), NEN-EN 12649, EN 60034-5 (2001), NEN-EN-IEC 60745-2-12, EN 60034-1 , EN61000-3-2, EN 61000-3-3

Mijdrecht, July 1st, 2010

Supplier: Bouwmachinefabriek Lievers B.V.
Address: Groot Mijdrechtstraat 68, 3641 RW Mijdrecht

Name: C.M. de Wit
Position: Managing director