OPERATION MANUAL
POKER VIBRATOR
P14-B

LIEVERS HOLLAND
Groot Mijdrechtstraat 68 – 3641 RW
Postbus 103 - 3640 AC
Mijdrecht (NL)
Tel.: 0031 – (0)297-231900 / Fax: 0031 – (0)297-231909
E-mail: info@lieversholland.nl / Internet: www.lieversholland.nl

LIEVERS HOLLAND

CONTENT

1. PREFACE 3

2. INTRODUCTION 4

3. TECHNICAL SPECIFICATIONS 5

4. SAFETY 6

4.1. SAFETY ASPECTS 6
4.2. SAFETY PRECAUTIONS 6
4.3. REMAINING RISK 7

5. USE 8

5.1. CONNECTING AND DISCONNECTING THE POKER VIBRATOR 8
5.2. OPERATION & APPLICATION 9
5.3. APPLICATION EXAMPLE 9

6. MAINTENANCE 10

6.1. CLEANING THE PETROL ENGINE 10
6.2. CLEANING THE FLEXIBLE POKER VIBRATOR 10
6.3. CLEANING THE VIBRATION CASE 11
6.4. RETENSIONING V-BELT P14B WITH PETROL ENGINE 11

7. TROUBLESHOOTING, REPAIRS 12

8. DISMANTLING, DISPOSAL 13

9. PART LISTS 14

10. DECLARATION OF CONFORMITY 19

© Lievers Holland, NL 1994.

All rights are reserved. Reprints, copies, adaptations for new editions and publications in any form or through any media, including abstract forms are not permitted unless written permissions is first obtained from Lievers Holland.

Lievers Holland may not be held responsible for any guarantees or liabilities for the contents of this publication and points to, in this case, all implied securities for suitability of merchantability or any other purposes. Lievers Holland further retains the right to revise this publication and to alter the contents over certain periods of time, without the obligation to report such alterations and changes first.

1. Preface

This manual has been written to help you operate and maintain the poker vibrator P14B safely. This manual is intended for dealers and operators of the poker vibrator P14B and contains useful instructions for use, maintenance and repair. These instructions need to be respected and followed.

Guarantee provisions

All damage to parts of the poker vibrator, occurring within 12 months after date of purchase as a consequence of material, production or construction defects, will be replaced by the manufacturer as soon as possible. The guarantee is valid for 12 months from the date of purchase except for wear parts.

The manufacturer declines all responsibility for unsafe situations, accidents and damage caused by:

- Ignoring safety and using instructions as described on the machine or the instruction manual.
- Incompetent or incorrect maintenance (f.i. irregular cleaning of the ventilation slots and cleaning with a high pressure cleaner or by a water jet under high pressure).
- Storing the machine in a damp place.
- Assembling or dismantling of the poker vibrator by unqualified personnel (employees who are unfamiliar with the content of this instruction manual).
- Other use than the prescribed use.
- Alternations of the machine carried out by other than manufacturer. This also includes assembling of non-original parts.

Guarantee certificate

P14 nr: _____

Date of purchase: _____

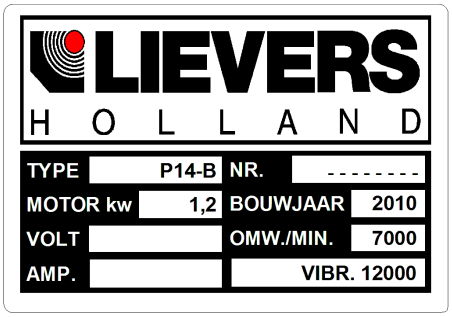

Fig. 1: example label P14-B

The label can be found on the backside under the hand grip.

2. Introduction

Intended use

A hand held poker vibrator is a machine with a vibrating, steel bottle, for compacting concrete. The poker vibrator P14-B consists of a gasoline motor in an impact and shock proof plastic motor housing and a flexible poker vibrator. The flexible poker vibrator is attached to the part of the spindle which sticks out of the motor housing. On the motor housing is a switch for turning the gasoline motor off.

Operation

The spindle ensures that the flexible drive shaft rotates. The drive shaft's rotating movement, ensures that the pendulum moves along the inner circumference of the poker head. This causes the vibrations. The vibrations from the poker head compact the concrete.

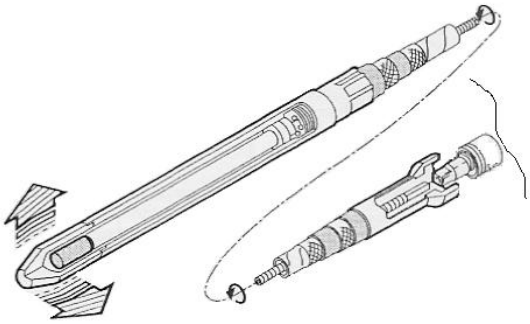

Fig 2: The poker vibrator's drive

Fig 3: Overview of the most important components

1. Hose coupling
2. Flexible vibration hose
3. Flexible shaft
4. Vibration case
5. Vibration needle
6. Gas handle
7. Petrol engine
8. Stop-switch
9. Backpack
10. Coupling drive pin

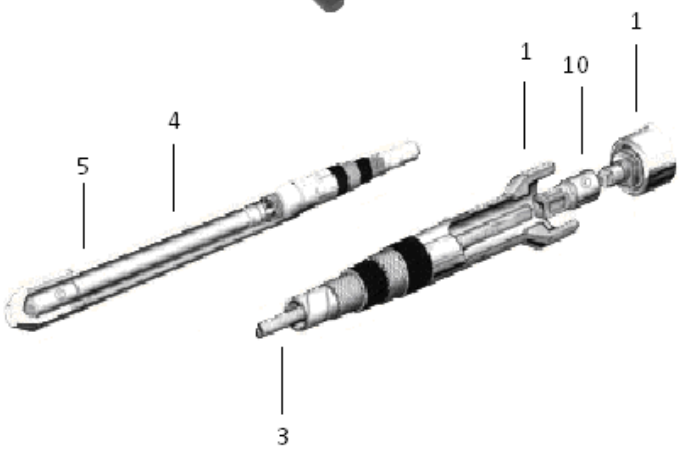

3. Technical specifications

Technical details
For technical details of the handheld poker vibrator P14-B, we also refer to the label on page 3 of this manual.

Measurements motor housing (incl. backpack)

Length	320 millimeter
Width	470 millimeter
Height	445 millimeter

Gasoline motor

Type	Honda GX35 4-stroke
Capacity	1,2 KW (1,6 HP) at 7000 rpm
Revolutions on spindle	4400 rpm
Vibrating element	12000 vib./min

Mass (without poker)	9,8 kg
Design	Portable.
Motor protection	Impact and shockproof plastic motor housing.
Poker vibrator connection	Quick release.
Sound pressure level db(A)	79 (outside, 1 metre distance, ear height).
Weighted effective value of acceleration	Determined according to ISO 5349 part 1: higher than 2,5m/s² (12,1m/s²) *. These data were measured during operation of the inside vibrating element in concrete.
Testing vibrating bottle	Tested on leakage following the internal production procedure.
* Obligated	According to ISO 5349, whenever wearing vibrating reducing gloves, a user can continuously work for 3 hours (comfort value) to a max. of 11.7 hours per day safely.

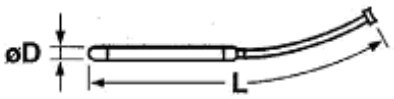

Diameter pokerhead øD (mm)	Mass vibr. poker (kg)	Vibration frequency (p.min)	Centrif. force (N)	Amplitude (mm)	Length flex. poker-vibrator L (m)
28	2,0	12000	2500	0.8	2 -2.5 - 3 - 3.5 - 4
38	3,4	12000	3900	1.0	2 -2.5 - 3 - 3.5 - 4
45	3,6	12000	4500	1.5	2 -2.5 - 3 - 3.5 - 4

Table 1: View of the assortment of flexible poker vibrators

The flexible poker vibrator with a pokerhead of 38 and 45 millimetres are available with rubber caps.

4. Safety

Explanation of the used safety symbols

1. Read the operating manual before using the machine.
2. Safety glasses, safety helmet and ear protection compulsory.
3. Gloves compulsory
4. Safety shoes with extra protection compulsory.
5. Inflammable material.
6. Be careful, Danger.

Fig. 4: Safety symbols

ENSURE THAT ALL SYMBOLS – ON THE POKER VIBRATOR – CAN ALWAYS BE CLEARLY READ .

4.1 Safety aspects

The following safety aspects apply to the machine:

- Safety symbols are present on the handheld poker vibrator P14-B.

4.2 Safety precautions

- Always read the necessary instructions in the manual. If the safety aspects are not clear to you, then ask the manufacturer for an explanation.
- Ensure that you are qualified (familiar with the content of this manual) for operating and carrying out light maintenance work to the poker vibrator.
- Regular maintenance improves safe operation of the poker vibrator P14.
- Prolonged operation of P14 may damage your health. Never operate the poker vibrator P14-B for longer than an hour at a time. When operating frequently, it is obligated to wear vibration reducing gloves.
- When operating the poker vibrator wear ear protection, safety glasses, a safety helmet, protective (anti-vibration) gloves and protective clothing.
- Be careful when lifting and carrying the poker vibrator. Do not bend forwards when picking up the apparatus, but bend your knees. Ensure that the working area is within your reach, so that you do not have to bend forward.
- Check the handle and strap attachments, before you activate the poker vibrator.

- Place a switched off poker vibrator on a solid and stable surface.
- When the poker vibrator is not being used for longer a period of time, then it must be stored in a dry and clean area.
- Do not use the poker vibrator with petrol engine indoors or in poorly ventilated places.
- Be careful when refuelling! It is strictly forbidden to refuel:
    - In the direct vicinity of open fire or other flammable materials
    - While smoking
    - In explosion endangered spaces
- Prolonged carrying of the poker by its backpack for long periods of time can damage your health.
- Connect the flexible poker vibrator to the spindle, before you activate the poker vibrator.
- Only use oil and fuel prescribed by the manufacturer.
- On working areas, take notice and follow general and local safety regulations. Before starting your work, make sure that you are informed about all safety regulations and instructions.

4.3 Rest risk

The manufacturer aimed for the best balance in functionality, safety and operation possibilities of the P14-B.

Please take notice of the following rest risk of the handheld poker vibrator P14-B:

- Prolonged operation of P14 may damage your health. Never operate the poker vibrator P14-B for longer than an hour at a time. When operating frequently, it is obligated to wear vibration reducing gloves.

The manufacturer describes this as a rest risk. Nevertheless, well instructed operators with a correct working attitude concerning safe operating are well capable of working safely with the P14-B.

5. Use

Read the safety aspects and operating instructions before use. If aspects are not clear to you, then contact the manufacturer.

For the location and description of the poker vibrator's parts, which are mentioned in the text, we refer to figure 3 in this manual.

5.1 Connection and disconnection of the poker vibrator

In the text below are numbers between brackets. These numbers are positions numbers and they correspond to the numbers in the parts list for figure 5 "connecting the flexible poker vibrator".

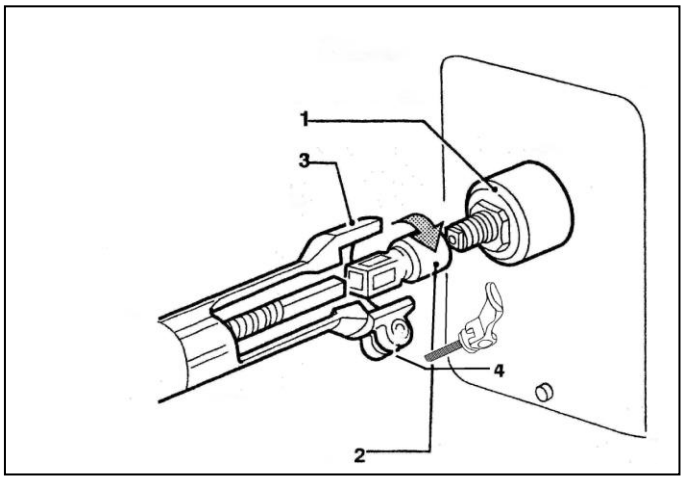

Fig. 5: Connecting the flexible drive hose

1. Motorcoupling
2. Drive pin
3. Hose coupling
4. Quick release

Connection

Connect the flexible poker vibrator to the motor coupling as follows:

1) Screw the drive pin (**2**) clockwise, onto the screw-thread of the drive spindle tightly.
2) Push the hose coupling (**3**) over the motor coupling (**1**). The square ended flexible drive shaft now slides into the drive pin.
3) Adjust the quick release and tighten it by pressing the handle down (**4**) .
4) The poker vibrator P14E is now ready for use.

Disconnection

To disconnect the flexible poker vibrator, proceed as follows:

1) Pull the handle of the quick release upwards (**4**).
2) Pull the hose coupling (**3**) from the motor coupling (**1**) and pull the flexible drive shaft out of the drive pin (**2**).

5.2 Operation and application

This section describes how to use the poker vibrator P14-B.

CAREFUL: READ THE SAFETY ASPECTS AND INSTRUCTIONS BEFORE YOU SWITCH ON THE MACHINE.

Starting procedure, compacting and switch off
For starting the petrol engine we refer to its manual.

1) Check if the flexible poker vibrator is correctly connected to the motor drive's spindle
2) Check if the stop switch is in the 'ON' position.
3) Start the petrol engine according to the regulations of the engine supplier.
4) Accelerate the engine and stick the poker vibrator into the concrete.
5) Allow the poker-vibrator to vibrate for 2 – 4 seconds in one place in the concrete.
6) Quit vibrating if there are no visible air bubbles anymore and the concrete is compacted completely.
7) After finishing, put the engine into the stationary-position by using the gas handle.
8) Switch of the engine by pushing the stop switch into the 'OFF –position.
9) Before storing the petrol engine be sure that the engine has been fully cooled.

5.3 Application examples

The distance between two vibrations places and the vibration period in one place, depends on the thickness of the concrete layer and the composition of the concrete. The following points are for guidance:

Floors:
- Stick the flexible poker-vibrator slowly into the concrete.
- Vibration time 2 - 4 seconds.
- Pull the flexible poker-vibrator slowly out of the concrete and move it.
- The next vibration places at a distance of ± 50 cm from one another.

Walls and columns:
- Sink the flexible poker-vibrator into the formwork.
- Pour concrete to ± 100 cm.
- Vibration time 2 - 4 seconds.
- Pull the flexible poker-vibrator out of the concrete slowly and move it.
- The next vibration places at a distance of ± 50 from on another

6. Maintenance

Although the poker-vibrator has a few moving parts, regular maintenance promotes a long and trouble-free life.

Warning: Switch of the petrol engine and allow the machine to cool off, before you can carry out any maintenance activities to the poker-vibrator.

6.1. Cleaning the petrol engine

In order to achieve a maximum cooling effect the ventilation openings must stay free from dirt, grease, and concrete. Check them at the end of each working day. If the ventilation openings are not opened, then clean them as follows:

1) Clean the outside of the ventilation housing with a brush and water.

CAREFUL: ENSURE THAT NO WATER GETS INTO THE MOTOR HOUSING AND INTO THE FUEL TANK.

2) Clean the direct area of the ventilation openings in the motor housing, with a brush or a damp cloth.
3) See to it that the throttle valve stays free from dirt.

WARNING: NEVER USE A HIGH PRESSURE CLEANING MACHINE FOR CLEANING THE PETROL ENGINE.
READ THE OPERATION INSTRUCTION SUPPLIED BY THE MANUFACTURER OF THE PETROL ENGINE.

6.2. Cleaning the flexible poker vibrator

During compacting of the concrete, the flexible poker-vibrator will become dirty. Periodical maintenance is vital to the sage and efficient operation of the flexible poker-vibrators. It is therefore highly recommended to clean the flexible poker-vibrator daily with water and a cleaning detergent, that does not affect the poker-vibrator material.

WARNING: DO NOT LUBRICATE THE PENDULUM AND THE POKERHEAD! THE FLEXIBLE SHAFT HAS BEEN LUBRICATED DURABLY BY THE MANUFACTURER.

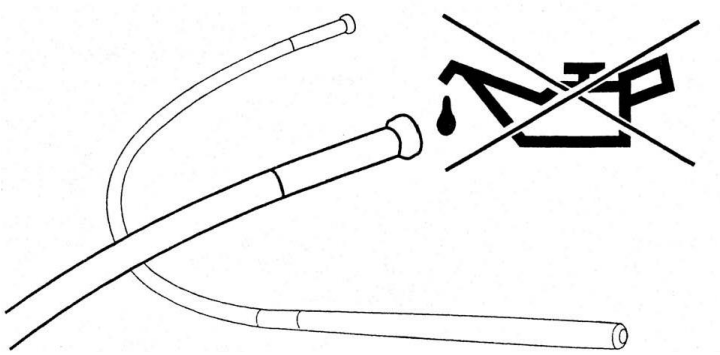

Fig 6: DO NOT LUBRICATE.

6.3. Cleaning the poker head

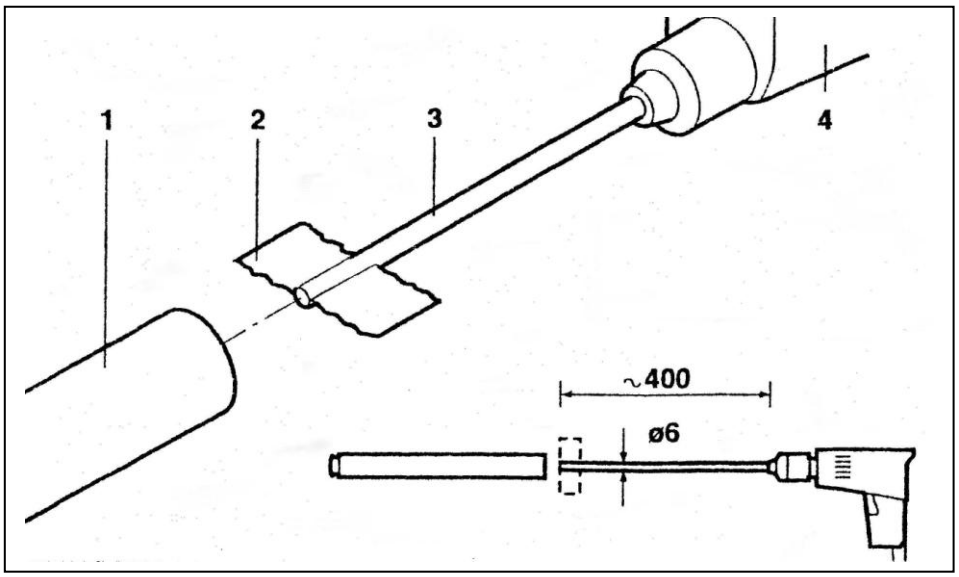

1. Pokerhead
2. Cleaning rag
3. Spindle with groove (length 40 cm diameter Ø 6 mm)
4. Drill with electric speed regulator

Fig. 7: Cleaning the pokerhead

6.4. Retensioning V-belt P14-B with petrol engine

Retension may be necessary after 100 working hours.

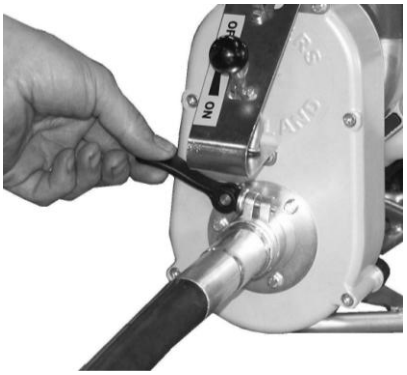

1. Remove the vibrating hose from the drive unit

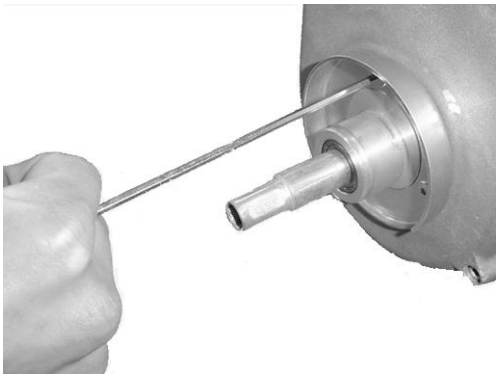

2. Unscrew the 3 flush-mounted bolts partly

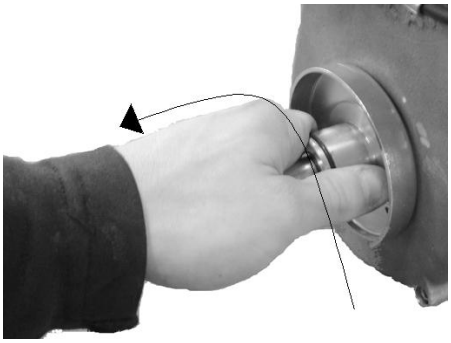

3. Tighten the V-belt until you feel resistance by left rotation
4. Tighten the 3 flush-mounted bolts keeping the V-belt under tension.
5. Replace the vibrating hose onto the drive unit and tighten it with the quick release

7. Troubleshooting,repairs

The table below shows the most occurring problems, causes and solutions:

PROBLEM	CAUSE	**SOLUTION**
The connected and activated petrol engine keeps tripping out.	The petrol engine has been overloaded, due to the flexible poker-vibrator being jammed between the reinforcement.	Prevent the flexible poker vibrator for getting jammed in the reinforcement. Stop operation if the poker vibrator gets jammed.
The petrol engine fails to run.	No fuel or the wrong fuel.	Check the amount of fuel in the tank and check if the right fuel has been used. Refill the tank with the right fuel.
The pokerhead is not vibrating sufficiently.	The pokerhead and the pendulum are dirty, due to lubrication with oil or grease.	Dismantle the pokerhead, the flexible drive shaft and the pendulum. Remove the grease from these parts and from the inside of the poker housing thoroughly. After removing the grease, lubricate the flexible drive shaft with a special grease, which is available at the manufacturer.
The tip of the pokerhead gradually vibrates less	Dirt on the inside of the pokerhousing, due to extended use.	Dismantle the pokerhead and the pendulum. Use a rag to clean and remove the grease from both of the parts (fig. 7).

Table 2: the most occurring problems, causes and solutions.

Repairs

When ordering parts please state the following information:

- Type of poker vibrator.
- Year of construction.
- Order number plus description of the part.
- The required quantity.
- The dispatch address and dispatch mode.

TIP: WHEN ORDERING PARTS, FILL IN THE ORDER FORM ACCURATELY. LIEVERS B.V. DECLINES ALL RESPONSIBILITY FOR THE SUPPLY OF INCORRECT SPARES DUE TO INCOMPLETE OR UNCLEAR REQUESTS.

Contact details Lievers Holland:
PO Box 103
3640 AC Mijdrecht
Tel: +31 (0)297-231900
Fax: +31 (0)297-231909
E-mail: info@lieversholland.nl
Internet: www.lieversholland.com

8. Dismantling, disposal

National and local regulations concerning dismantling and disposal of materials need to be obeyed. According to our knowledge, handheld poker vibrator P14B does not contain material which is a danger to the environment.

9. Part lists

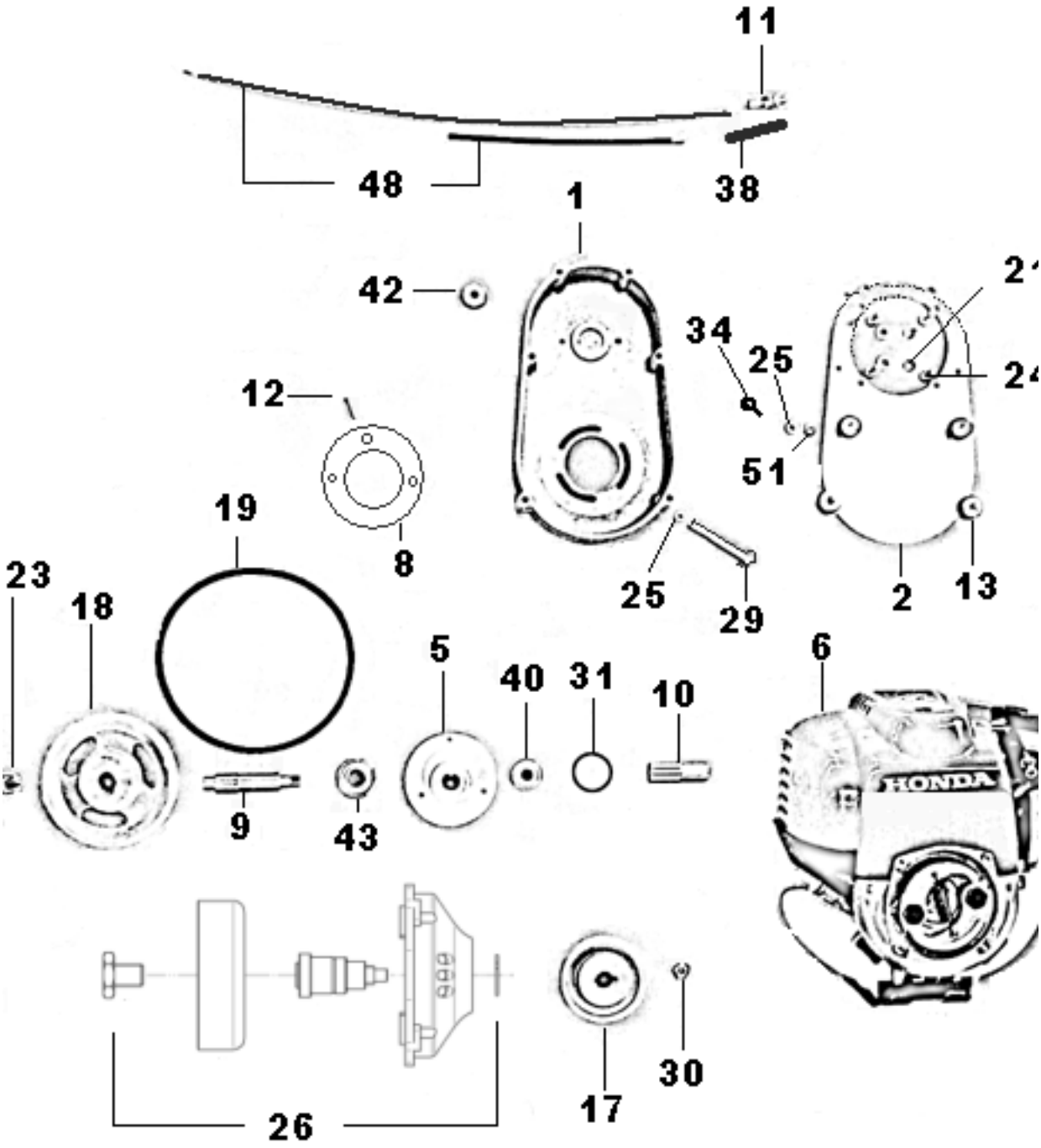

Fig. 8: Exploded view P14B drive unit

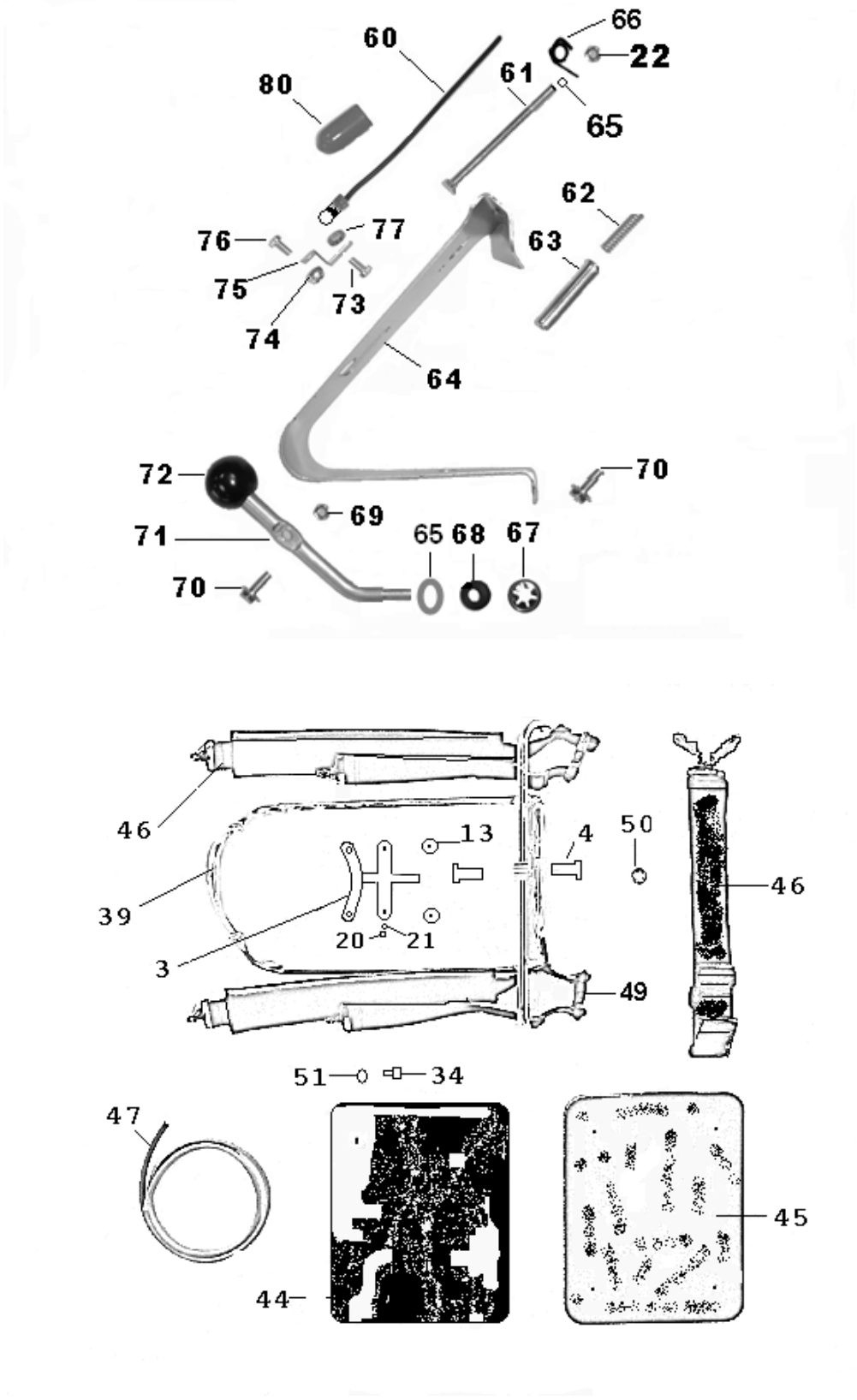

Fig. 9: Exploded view P14B drive unit

Table 3: part list P14B drive unit

Index	Article number	Quantity	Description
1	1101310001	1	Aluminium gearbox (bare)
2	1101310002	1	Aluminium back plate gearbox
3	1101310003	1	Hinge suspension bow
4	1101310004	2	Nylon slide bearing 12x16x19
5	1101310005	1	Aluminium coupling
6	2640A35	1	Honda GX35-set
7	2643	1	Stop switch
8	1101310008	1	Adjusting ring steel
9	1101310009	1	Spindle shaft
10	1101310010	1	Coupling drive pin
11	2644	1	Throttle cable adjusting bolt
12	0121	3	Socket head Bolt M5x20
13	00522	4	Rubber buffer 20x15
17	1101310017	1	V-belt pulley small
18	1101310018	1	V-belt pulley large
19	1101310019	1	V-belt
20	0091	5	Nut M6
21	0178	6	Spring washer M6
22	0099	4	Nut M5
23	0177	1	Nut M12 fine
24	0165	4	Socket head bolt M6x25
25	0179	6	Spring washer for M5
26	1101310014	1	Centrifugal coupling (complete)
29	0306	4	Socket head bolt M5 x 60
30	0307	1	Nut M10 fine x 1.25
31	1101220040	1	O-ring
34	0269	6	Socket head bolt M5x12
38	2383c	1	Retaining spring for carburettor
39	1101310034	1	Tubular frame backpack
40	1101220130	1	Front ball bearing
42	1101220240	1	Ball bearing in gearbox
43	2619	1	Ball bearing on spindle shaft
44	1101310037KAAL	1	Aluminium back plate backpack
45	1101310038	1	Foam plate for backpack
46	1101310039	1	Shoulder belt set
47	1101310040	1	Border profile alu/back-plate
48	1101310041k	1	Throttle cable short
49	1101310035	4	Harp closure 5 mm
50	0310	1	Retaining ring for hinge suspension bow
51	0195	6	Flat washer large M5
60	11013100600	1	Earthened wire kill switch backpack
61	0312	2	Bolt M5x70
62	2383	1	Retaining spring for gas handle
63	1101310044	1	Trottle cable support bushing
64	1101310042	1	Mounting bracket throttle/killswitch
65	0153	5	Flat washer m5
66	2335	1	Cable clamp
67	0311	1	Starloch retaining ring for throttle handle (6mm)
68	1101310068	1	Rubber ring for throttle handle
69	0081	2	Nut with retaining ring M5
70	0313	2	Bolt with retaining ring M5x12
71	1101310043	1	Trottle handle (alu)
72	1101310045	1	Knob for throttle handle
73	0309	1	Nylon bolt M5x8
74	0098	1	Self retaining nut M4
75	2358	1	Earthened wire bracket kill-switch
76	0240	1	Bolt M4x8
77	0308	1	Brass nut M5
80	1101310046	1	Kill-switch protection sleeve

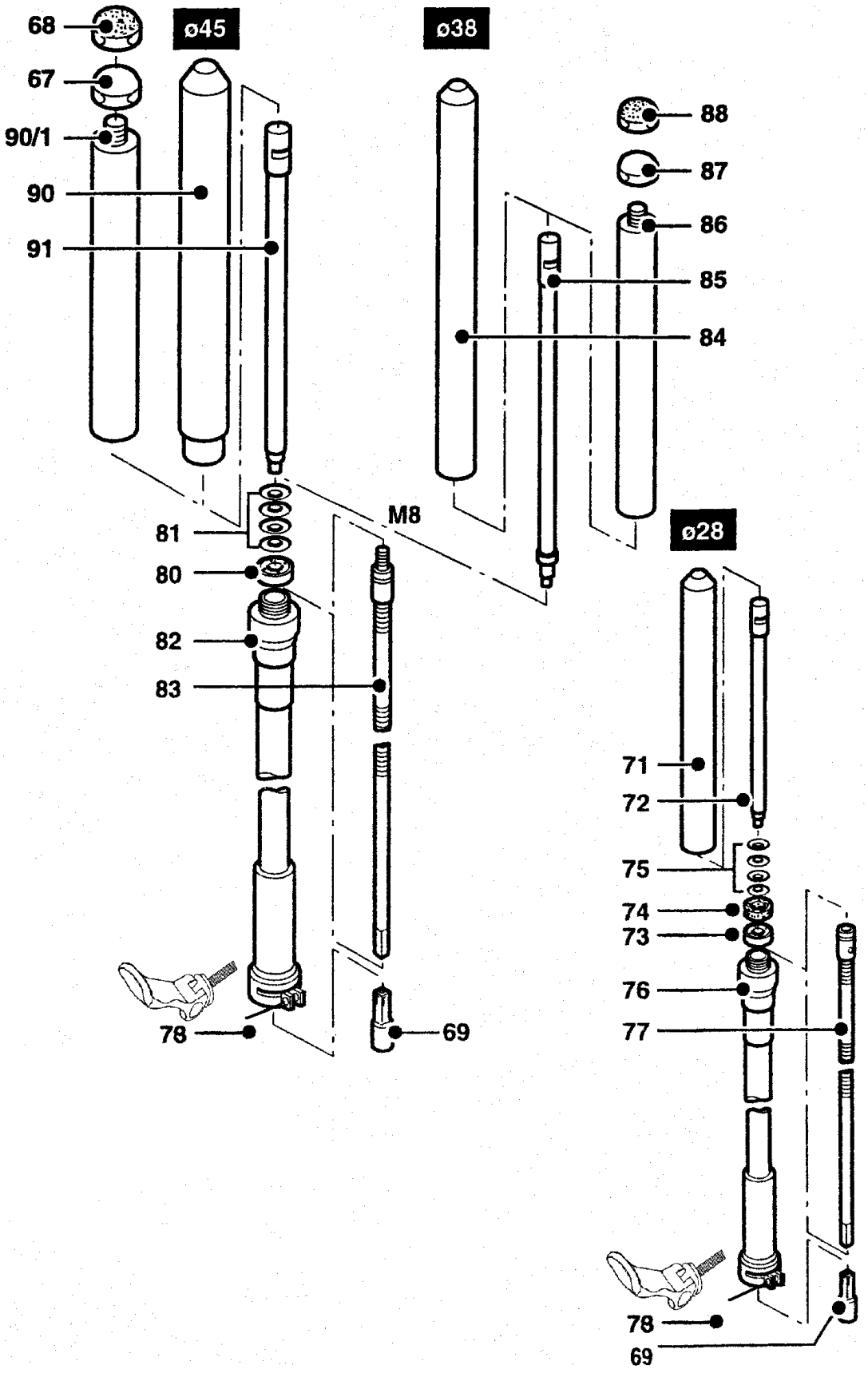
68
67
90/1
90
91
ø45
ø38
88
87
86
85
84
81
80
82
83
M8
ø28
71
72
75
74
73
76
77
78
69
78
69

Fig. 10: Exploded view flexible poker vibrator

Index	Article number	Quantity	Description
67	1100450010	1	Steel point 45 mm
68	1100450011	1	Rubber tip 45 mm
69	1100000008	1	Coupling pin
71	1100280001	1	Vibrator housing 28 mm
72	1100280002	1	Pendulum 28 mm
73	1100280003	1	Bearing 28 mm
74	1100280004	1	Joint ring 28 mm
75	0190	4	Spring sourcer 28 mm
76	1100282006	1	Hose + coupling 28 mm - 2.0 metres
77	1100282007	1	Flexible shaft 28 mm - 2.0 metres M8
76	1100282506	1	Hose + coupling 28 mm - 2.5 metres
77	1100282507	1	Flexible shaft 28 mm - 2.5 metres M8
76	1100283006	1	Hose + coupling 28 mm - 3.0 metres
77	1100283007	1	Flexible shaft 28 mm - 3.0 metres M8
76	1100283506	1	Hose + coupling 28 mm - 3.5 metres
77	1100283507	1	Flexible shaft 28 mm - 3.5 metres M8
76	1100284006	1	Hose + coupling 28 mm - 4.0 metres
77	1100284007	1	Flexible shaft 28 mm - 4.0 metres M8
78	1100000016	1	Quick release
80	1100340003	1	Bearing 38/45 mm
81	0191	4	Spring sourcer 38/45 mm
82	1100342006	1	Hose + coupling 38/45 mm - 2.0 metres
83	1100342007	1	Flexible shaft 38/45 mm - 2.0 metres M8
82	1100342506	1	Hose + coupling 38/45 mm - 2.5 metres
83	1100342507	1	Flexible shaft 38/45 mm - 2.5 metres M8
82	1100343006	1	Hose + coupling 38/45 mm - 3.0 metres
83	1100343007	1	Flexible shaft 38/45 mm - 3.0 metres M8
82	1100343506	1	Hose + coupling 38/45 mm - 3.5 metres
83	1100343507	1	Flexible shaft 38/45 mm - 3.5 metres M8
82	1100344006	1	Hose + coupling 38/45 mm - 4.0 metres
83	1100344007	1	Flexible shaft 38/45 mm - 4.0 metres M8
84	1100380001	1	Vibrator housing 38 mm
85	1100380002	1	Pendulum 38 mm
86	1100380009	1	Vibrator housing interchangeable 38 mm
87	1100380010	1	Steel point 38 mm
88	1100380011	1	Rubber tip 38 mm
90	1100450001	1	Vibrator housing 45 mm
90/1	1100450003	1	Vibrator housing interchangeable 45 mm
91	1100450002	1	Pendulum 45 mm

Table 4: Part list P14B flexible poker vibrator

10. Declaration of conformity

EC DECLARATION OF CONFORMITY

EC-declaration of agreement for machinery
(Directive 2006/42/EC, Annexe II, under A)

Supplier: Bouwmachinefabriek Lievers B.V.
Address: Groot Mijdrechtstraat 68, 3641 RW Mijdrecht

Hereby declares that

The poker vibrator P14 B:

1) Complies with the regulations for the Machine Directive 2006/42/EC

2) complies with the following harmonised standards: NEN-EN-12100-1 (2003), NEN-EN 12100-2 (2003)

Mijdrecht, 1 July 2010

Supplier: Bouwmachinefabriek Lievers B.V.
Address: Groot Mijdrechtstraat 68, 3641 RW Mijdrecht

Name: C.M. de Wit
Position: Managing director